VC 600
Clamp-on
Flow sensor for compressed air and gases

CS INSTRUMENTS

www.cs-instruments.com/us

Why Clamp-on?

100 % Process reliability

Non-invasive, no drilling, no welding, no risk of contamination, and no need to re-certify the compressed air quality after installation.

90 % Time saving during installation

Mount the quick-release system – fasten the measuring unit – and you're done!

100 % Safety

No risk from working on pressurized pipes – no need to open the pipe – therefore no pressure limitation – installation possible at any time without interrupting operation.

100 % Leak-free

No seals and no direct contact with the process.

0 % Energy loss

No differential pressure caused by the measuring unit in the gas flow. No leaks.

Typical applications

Applications in semiconductor manufacturing

In semiconductor manufacturing, a reliable supply of high-purity gases and compressed air is crucial for stable production processes. The VC 600 enables precise flow measurement without the need to access the pipework. Thanks to its clamp-on technology, the risk of contamination is avoided and measurements can be carried out while the system is in operation – ideal for sensitive cleanroom applications.

Applications in the pharmaceutical industry

The pharmaceutical industry sets the highest standards for hygiene and process safety. With the VC 600, compressed air and gas consumption can be measured non-invasively, without opening the pipework or interrupting the production process. This preserves the integrity of the pipework while ensuring that energy consumption and leaks are reliably monitored.

Applications in the food industry

Whether in manufacturing, filling or packaging, compressed air and industrial gases play a key role in the food industry. The VC 600 measures flow from the outside and requires no intervention in the pipework. This prevents contamination, reduces downtime and enables efficient monitoring of consumption and leaks – ensuring cost-effective and hygienic production.

VC 600 CLAMP-ON

Ultrasonic flow meter for measuring compressed air and gas consumption.

The VC 600 clamp-on flow sensor is secured directly to the pipework using an innovative quick-release clamping system. Installation takes just a few moments using a screwdriver and without interrupting the process.

The VC 600 universal measuring unit is versatile, covers external pipe diameters from 1" mm to 3.5" mm and is compatible with all quick-release clamping systems. Larger nominal diameters are available on request.

Thanks to its unique dynamic signal processing, the VC 600 is suitable not only for standard pipes but also for measuring thin-walled stainless steel pipes in accordance with DIN EN 10357, with a wall thickness of just 1.5 mm.

INSTALLATION

Non-intrusive
flow measurement

Quick-release system

Quick-release clamp

Measuring unit

Fastening via screwdriver

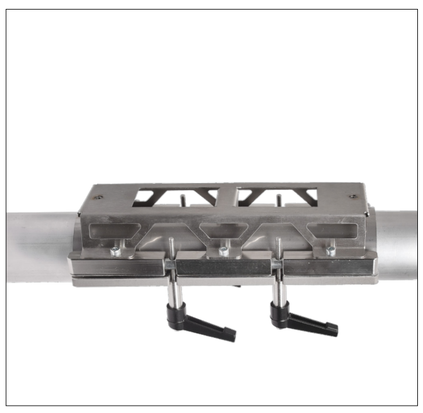

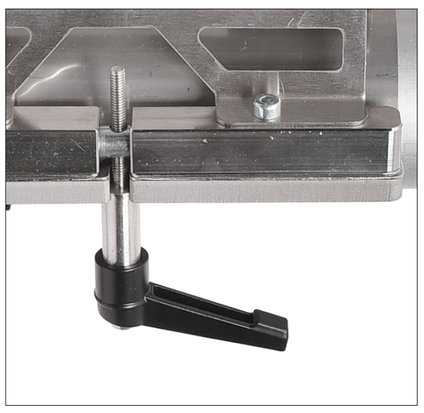

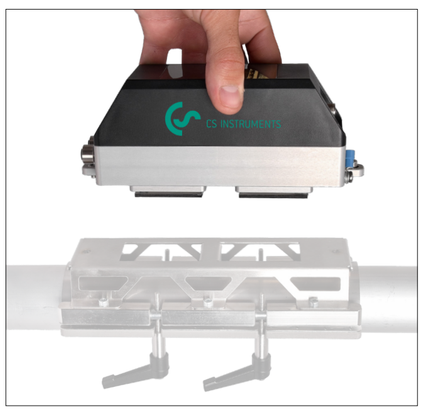

ADVANTAGES:

- No need to interfere with the existing pipework – (no risk of contamination)
- Installation without interrupting operations (no drilling, no welding)
- Quick and easy installation
- No differential pressure caused by the measuring unit in the gas flow
- No pressure limitation
- No leakage
- Extremely fast response time
- A much wider measuring range of up to 25 m/s than standard clamp-on sensors

MEASURING PRINCIPLE

The VC 600 sets new standards in clamp-on flow measurement

The unique signal processing and state-of-the-art algorithms in the VC 600 enable a measurement range of 0.3 to 65 or 82 fps from a pipe pressure as low as 43.5 psi (g).

This significantly expands the scope of application of the VC 600 compared to standard clamp-on sensors on the market. Consequently, the VC 600 can be used for leak measurement and also for very high flow rates from 43.5 psi (g) pressure upwards, with no maximum pressure limit.

The VC 600 measuring unit calculates the flow rate in Nm³/h at 0 °C and 1013 mbar, or in accordance with ISO 1217 at 1000 mbar and 20 °C, based on the operating velocity in m/s. The required parameters – gas temperature and line pressure – can either be entered manually or measured via external pressure and temperature sensors.

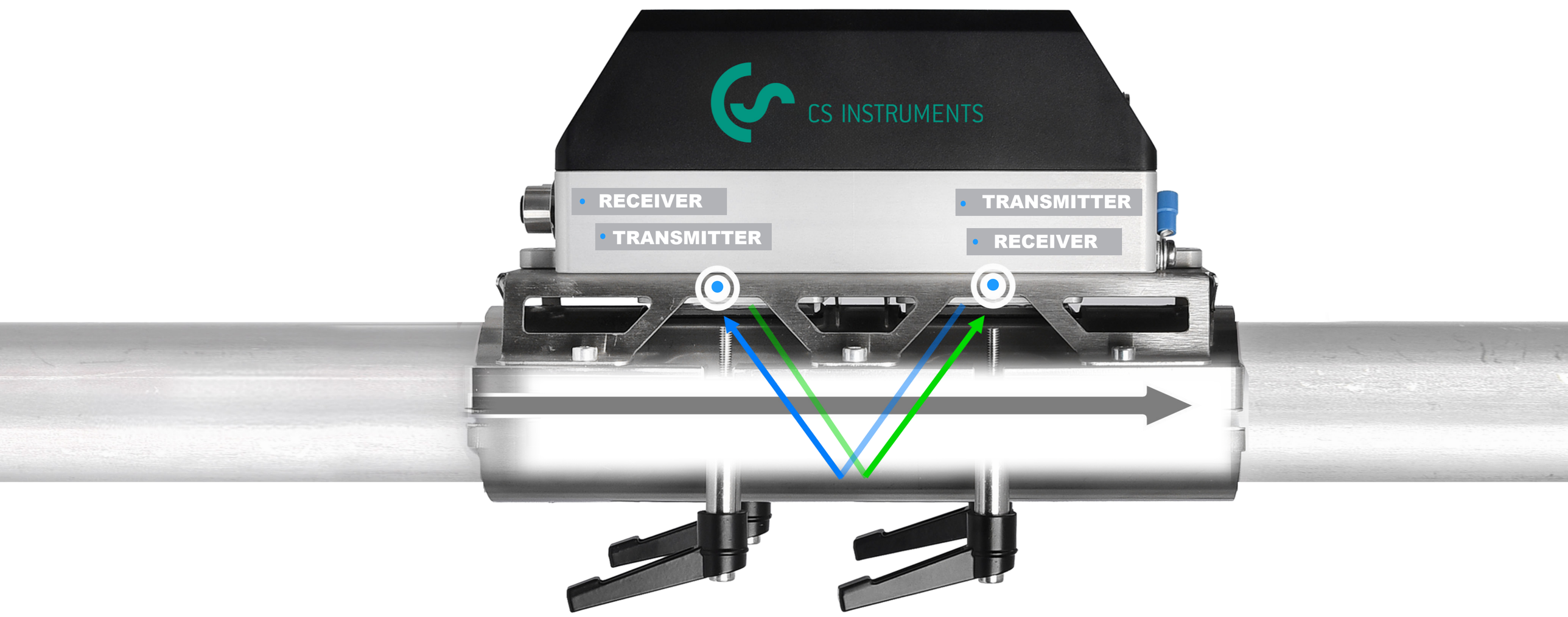

340 µs transit time A **in** the direction of flow

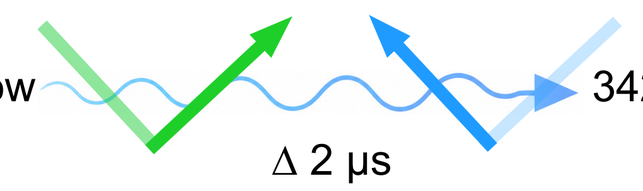

342 µs transit time B **against** the direction of flow

Measurement principle - Time-of-flight difference measurement

FLOW VELOCITY:

The VC 600 uses sound waves over two ultrasonic sensors (transmitter and receiver) to emit in the direction of flow and against the direction of flow of the medium. The transit time of the sound is shortened in the direction of flow and lengthened against the direction of flow. The flow velocity is proportional to the transit time difference.

The faster the medium flows, the bigger the time-of-flight difference. The flow direction and operating velocity are calculated from the time-of-flight difference.

Precise and reliable measurement

System pressure is the critical physical hurdle in ‘clamp-on’ time-of-flight difference measurement.
The higher the system pressure, the better the measurement performs. Ultrasonic waves propagate easily through solids such as steel pipes; however, this becomes increasingly difficult in pipes with little or almost no overpressure.

However, with the newly developed VC 600, reliable measurements are already possible from as low as 43.5 (g).
The higher the system pressure in the pipe, the easier the measurement – and this is possible without any maximum pressure limit.

The unique analysis function for signal evaluation and the latest algorithms in the VC 600 enable the signal strength to be assessed in critical installations.

Insufficient distance from sources of interference – such as flanges, transitions, interference signals on pipes, etc. – combined with low system pressure, can impair the measurement.

If the signal strength is insufficient, damping clamps can remedy the situation by absorbing interference signals on the pipework.

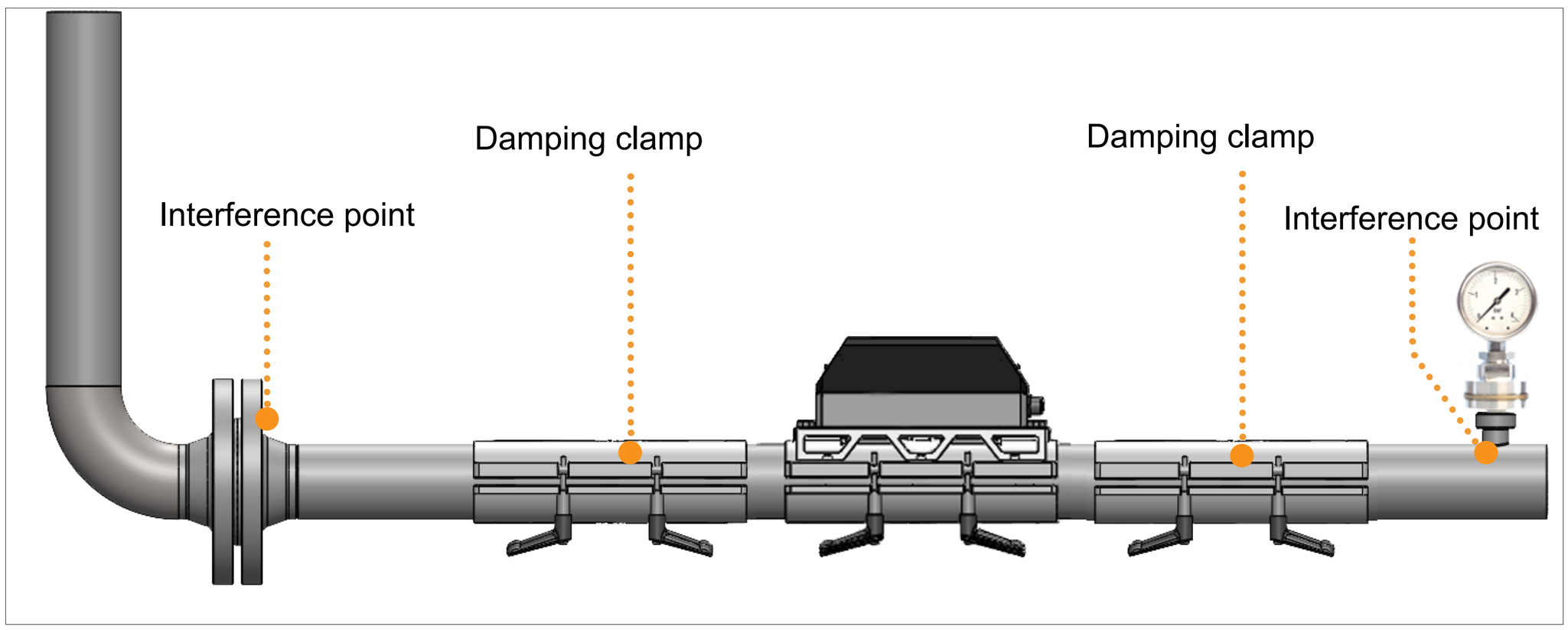

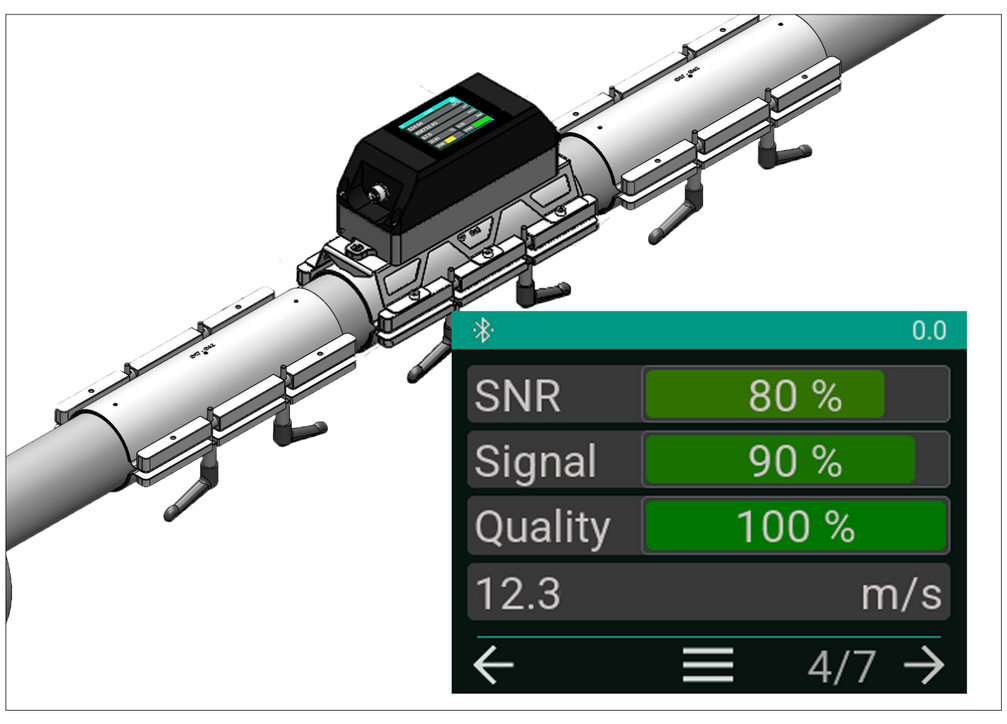

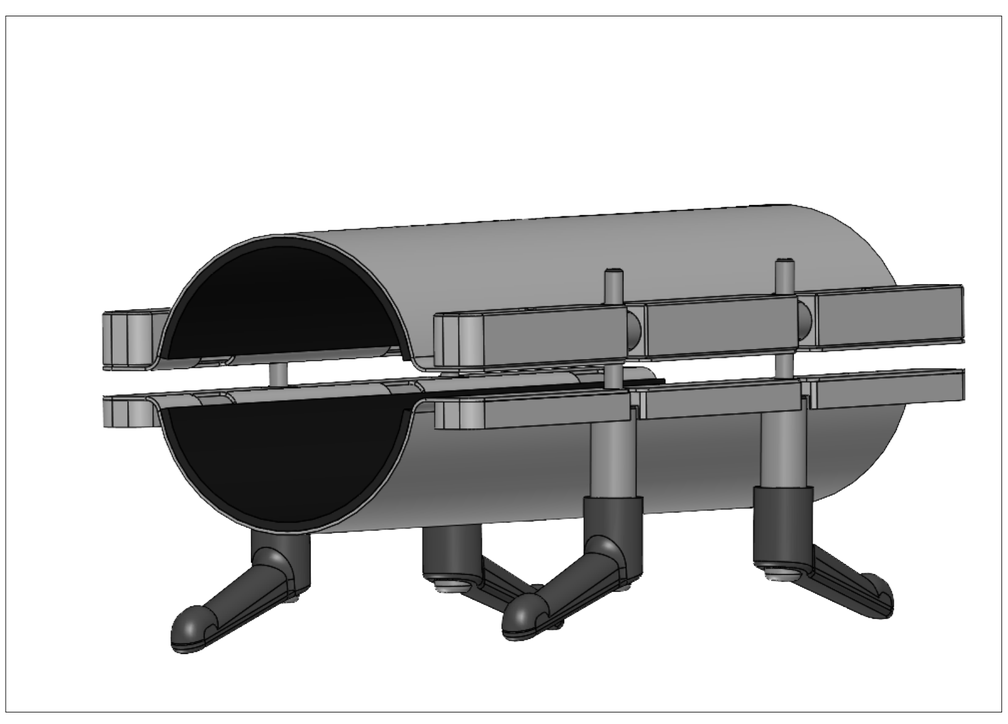

Damping clamp

Maximum flexibility during installation

For pipe diameters from 1" to 3.5"

Suitable for a wide range of pipe diameters

Flow measurement ranges for the VC 600 (Max version. vB = 20 m/s)					
Order Code	**Pipe outer diameter**	**Pipe internal diameter (for example)**	**Measuring end range under operating conditions in m³/h**	**Measuring range in m³/h of compressed air (ISO 1217: 20°C. 1000 mbar) at 7 bar(g). 20°C**	
				from	**to**
A20	Ø 25...30 mm	Ø 21.7 mm	26.63	0.85	213
A30	Ø 32...36 mm	Ø 27.3 mm	42.15	1.35	337
A40	Ø 38...43 mm	Ø 36 mm	73.92	2.35	586
A50	Ø 45...50 mm	Ø 41.9 mm	99.28	3.18	794
A60	Ø 50...55 mm	Ø 50 mm	141.37	4.52	1130
A70	Ø 57...62 mm	Ø 53.1 mm	159.45	5.10	1275
A80	Ø 63...70 mm	Ø 60.3 mm	205.62	6.58	1644
A90	Ø 72...78 mm	Ø 68.9 mm	268.45	8.59	2147
A95	Ø 78...84 mm	Ø 75.2 mm	319.78	10.23	2558
A100	Ø 84...90 mm	Ø 80.9 mm	370.10	11.84	2960

Sample calculation for determining the flow rate in m³/h (ISO 1217: 20 °C, 1000 mbar at 15 bar(g), 20 °C)

Assumption: VC 600 with an internal pipe diameter of 50 mm

Formula: General gas equation $\frac{p1*V1}{T1} = \frac{p2*V2}{T2} = \frac{16\ \text{bar (abs)}*141.37\ \text{m}^3/\text{h}}{293\ \text{K}} = \frac{1\ \text{bar (abs.)}*V2}{293\ \text{K}}$

V2 = 2262 m³/h (based on ISO 1217 at 20 °C, 1000 mbar)

Compatible pipe materials

- **Stainless steel**
- **Steel**
- **Aluminum**

Gas types

- **Compressed air**
- **Nitrogen**
- **...other gases**

Direct visualisation on the display

...integrated multifunction display with touchscreen

Touchscreen display
for direct configuration and data
visualisation on site

Input for optional
pressure sensor

RS 485
Interface
(Modbus RTU)

4...20 mA
Output
as standard

Input for
optional
temperature sensor

Full parameterisation, reading of live measurement data, and carrying out service diagnostics via a free app (iOS / Android) using the Bluetooth interface.

Global customer support via the app provided by a service technician

Manual pressure and temperature compensation

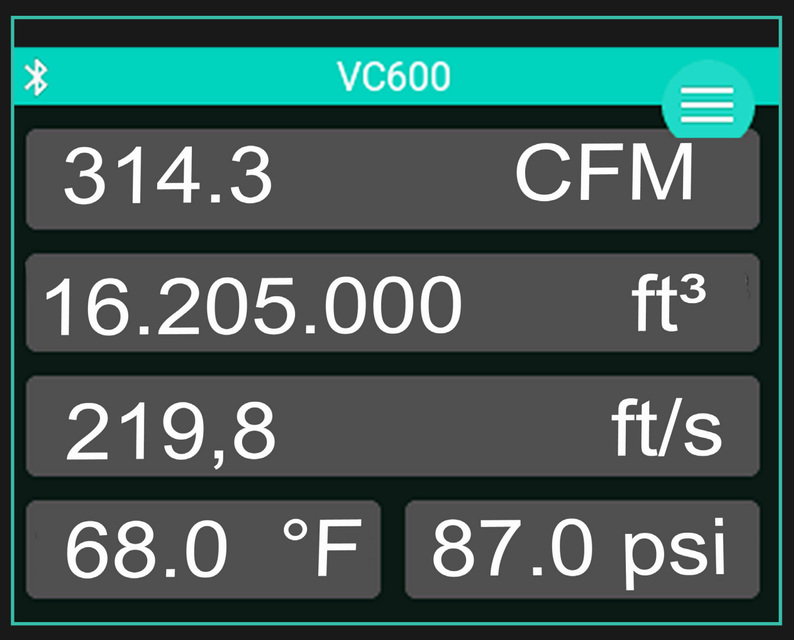

System pressure and system temperature are entered via the display.

The VC 600 uses these values to calculate the standard volume flow rate, either reference to 32 °F and 14.70 psia or, in accordance with ISO 1217, relative to 68 °F and 14.50 psia.

Measured pressure and temperature compensation

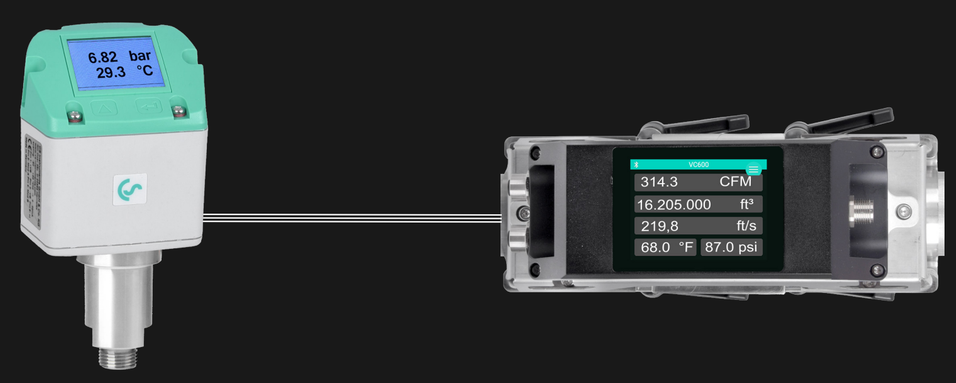

For systems with highly fluctuating operating pressure, the installation of a pressure sensor (PTS 500) is recommended for compensation.

The VC 600 calculates the standard volume flow rate online based on the readings from the connected temperature and pressure sensors – either reference to 32 °F and 14.70 psia or, in accordance with ISO 1217, relative to 68 °F and 14.50 psia.

Quick commissioning thanks to simple menu navigation

Check signal quality

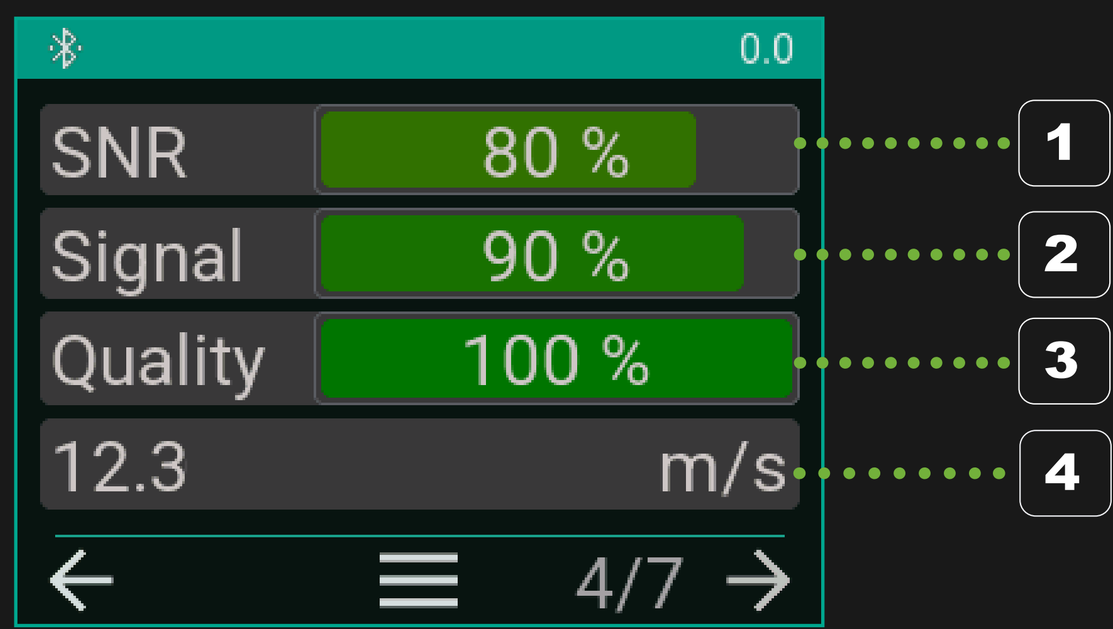

Figure 1: 1 Signal-to-noise ratio / 2 Signal strength / 3 Signal Quality / 4 Operating velocity

Enter pipe diameter

Figure 2: Easy entry of pipe dimensions on the device

Configuring interfaces

Figure 3: Modbus interface and analogue output individually configurable

CS SensorApp

- The free CS SensorApp quickly and easily detects all VC 600 units in the vicinity
- The sensors are configured via your mobile device
- Available for iOS and Android devices – App Store (Apple) or Play Store (Android)
- Live measurement data, sensor settings and parameterisation
- Easy access via the CS SensorApp to hard-to-reach sensors
- User-friendly and intuitive operation

SensorApp

App / Connect to the sensor

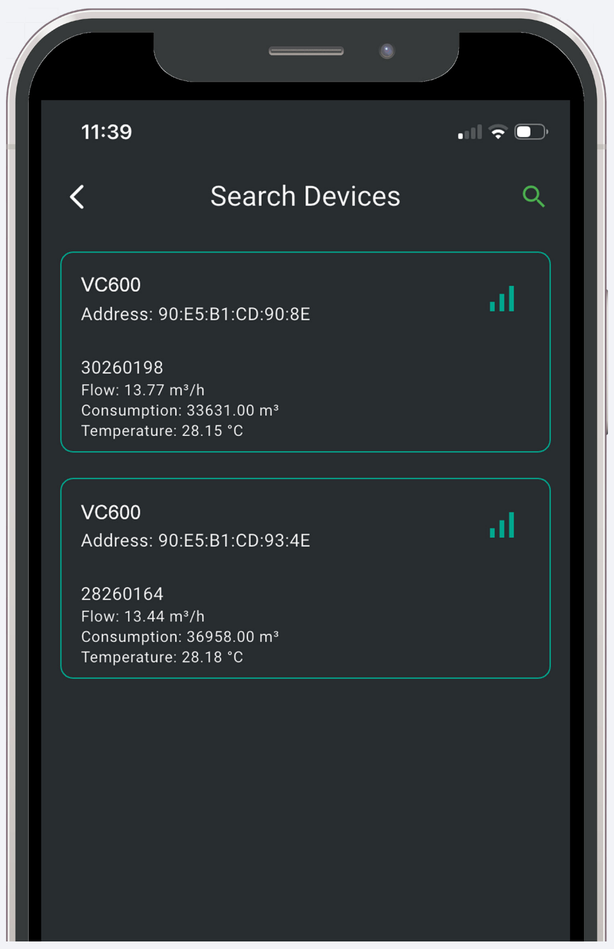

Search for / connect sensors

The CS SensorApp detects all VC 600 devices in the vicinity. Select the desired sensor from the list. Then establish the connection.

App / Sensor configuration

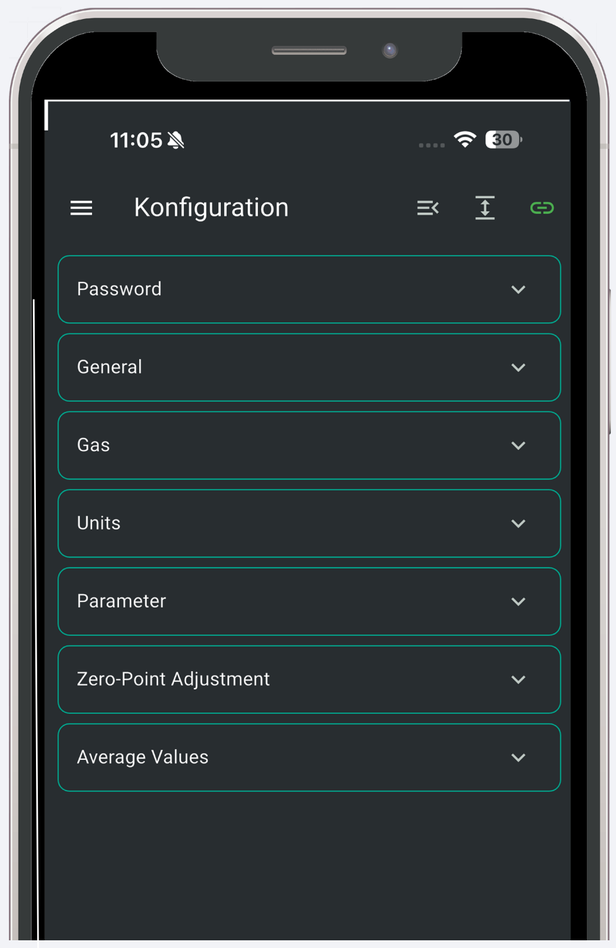

Configuration of sensor settings

Naming the measurement point, resetting the meter reading, adjusting units, setting the gas type, zero point calibration, settings for calculating average values

App / Current measurement values

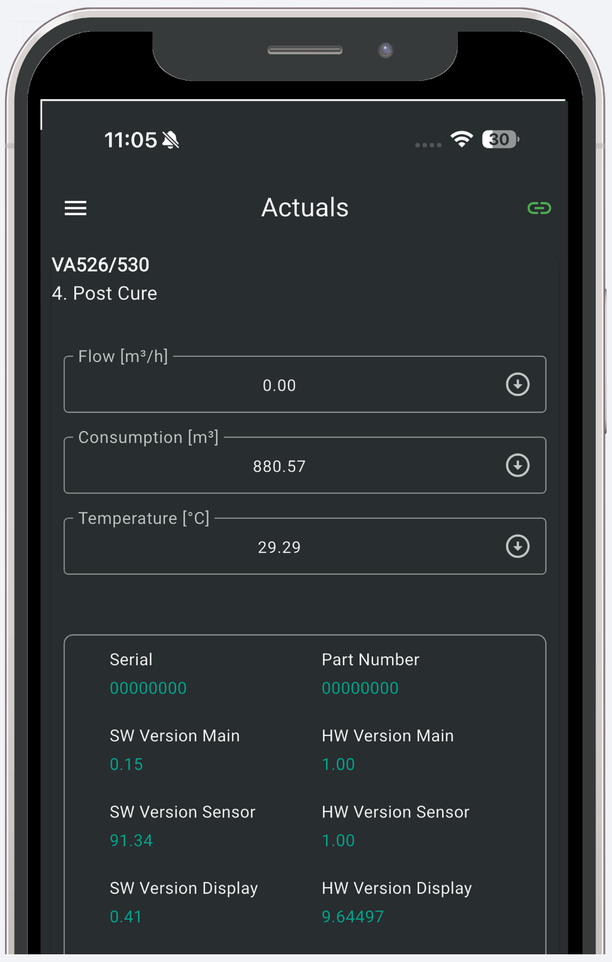

Everything you need at a glance

Current readings, serial numbers,
and calibration dates are clearly displayed

App / Current readings and graphs

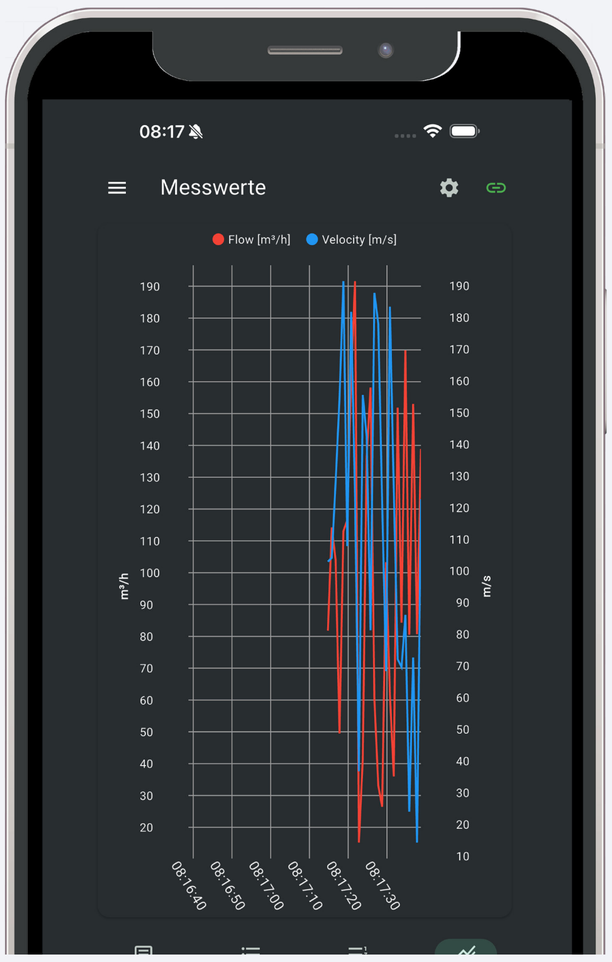

Real-time measurements and data analysis

Current measurement values can be accessed in real time and visualized as colored measurement curves. Essential functions such as zooming, selecting or deselecting individual measurement curves, freely selecting time periods, scaling the axes, selecting colors, etc. are integrated.

App / Consumption and leakage analysis

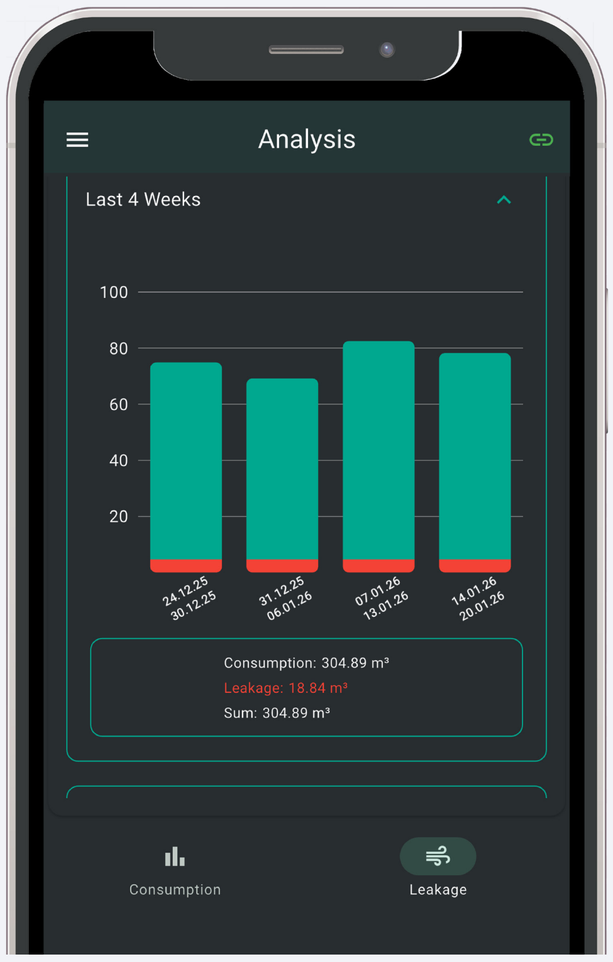

Can be exported as a CSV or PDF file

Analysis of the consumption and leakage profile over the last two years (measured at 10-minute intervals) thanks to the internal ring buffer.

App / Remote access via TeamViewer

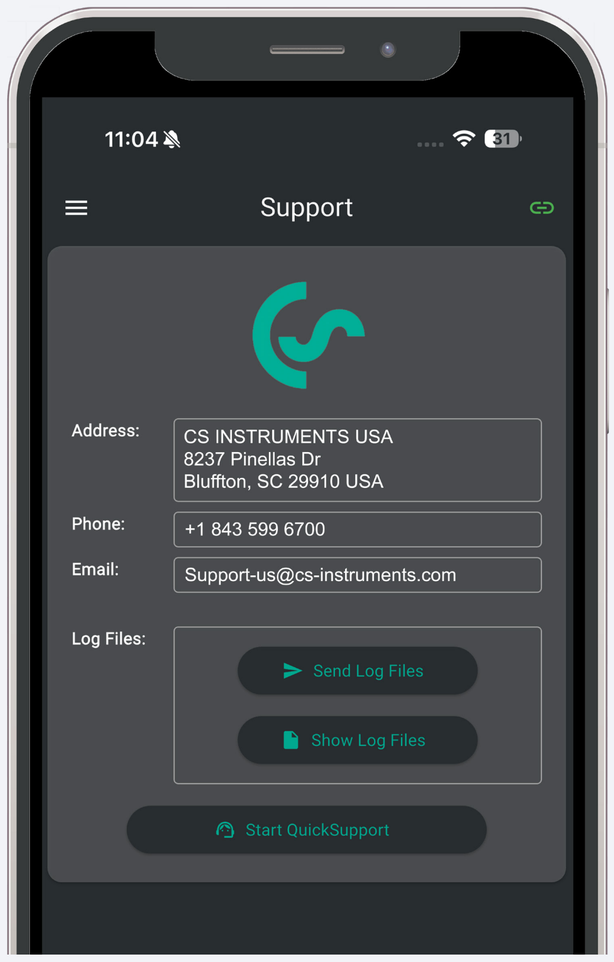

Support - Help

By clicking on ‘Start Quick Support’, you’ll allow one of our service engineers to contact you directly and help you with your enquiry.

VC 600 – Clamp-on flow sensor with quick-release system

DESCRIPTION		ORDER NO.
	VC 600 – Clamp-on flow sensor with quick-release system for compressed air and gases	0695 0600 + Order code A_…I_

TECHNICAL SPECIFICATIONS VC 600	
Measured variables:	m³/h, l/min (1000 mbar, 20 °C) for compressed air or Nm³/h, Nl/min (1013 mbar, 0 °C) for gases
Units adjustable via the CS SensorApp:	m³/h, m³/min, l/min, l/s, ft/min, cfm, m/s, kg/h, kg/min, g/s, lb/min, lb/h
Sensor:	Ultrasonic "clamp-on"
Measuring medium: :	Air, gases
Measuring range:	See table
Accuracy relative to QB (operating conditions): (v. M. = from the measured value) (v. E. = from the final value)	± 1.5 % of m.v. ± 0.3 % of f.s.
Operating temperature:	-4...+176 °F
Operating pressure:	from 43.5 psi(g)
Digital output:	RS 485 interface (Modbus RTU), M-Bus (optional), Ethernet interface or PoE, IO-Link, Bluetooth
Analog output:	4…20 mA for CFM
Supply:	18…36 VDC, 7 W
Burden:	< 500 Ω
Housing:	Polycarbonate (IP 65), Aluminium
Quick-release clamping system:	Stainless steel, 316 L
Installation position:	any
Data logger:	Memory: 50 MB Example: Measurement interval 10 mins. Memory capacity for 2 years
Input for optional pressure sensor:	4...20 mA (2-wire) RS 485 (Modbus RTU) for PTS 500
Input for optional temperature sensor:	Pt 100, Pt 1000 (2-, 3- or 4-wire) 4...20 mA (2-wire)

Order code VC 600 - Complete set

0695 0600_A20_B1_C1_D1_E1_F1_G1_H1_I1

Quick-clamping system for pipe size (outer diameter)	
A20	Ø 25...30 mm
A30	Ø 32...36 mm
A40	Ø 38...43 mm
A50	Ø 45...50 mm
A60	Ø 50...55 mm
A70	Ø 57...62 mm
A80	Ø 63...70 mm
A90	Ø 72...78 mm
A95	Ø 78...84 mm
A100	Ø 84...90 mm

Wall thickness	
B1	1.5...2.2 mm
B2	2.2...5.0 mm

Material type	
C1	Steel, stainless steel, aluminium

Adjustment/calibration	
D1	No real gas calibration – gas setting via gas constant
D2	True gas calibration for the selected gas type

Gas type	
E1	Compressed air
E2	Nitrogen (N2)
E90	Other gases available on request

Measuring range	
F1	0...20 m/s
F2	0...25 m/s

Accuracy class	
G1	± 1.5% of the measured value ±0.3% of full scale (standard)

Reference standard	
H1	20°C, 1000 mbar
H2	0°C, 1013.25 mbar
H3	15°C, 981 mbar
H4	15°C, 1013.25 mbar

Signal output/bus connection option	
I1	1x 4…20 mA, RS485 (Modbus-RTU)
I2	1x 4…20 mA, IO-Link
I3	Ethernet interface PoE (Modbus/TCP), 1x 4…20 mA, RS485
I4	M-Bus, 1 x 4…20mA, RS485 (Modbus-RTU)

DESCRIPTION		ORDER NO.
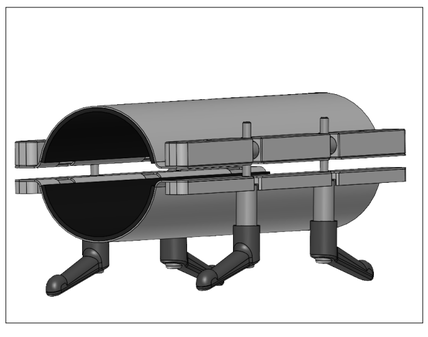	VC 600 – Damping clamps for absorbing interference signals	Z695 0601 + Order code A_

Order code for damping clamps

Z695 0601_A20

Pipe size (outer diameter)	
A20	Ø 25...30 mm
A30	Ø 32...36 mm
A40	Ø 38...43 mm
A50	Ø 45...50 mm
A60	Ø 50...55 mm
A70	Ø 57...62 mm
A80	Ø 63...70 mm
A90	Ø 72...78 mm
A95	Ø 78...84 mm
A100	Ø 84...90 mm

VC 600 – Universal measuring unit – suitable for all quick-clamping systems from Ø 25 mm to Ø 90 mm

DESCRIPTION		ORDER NO.
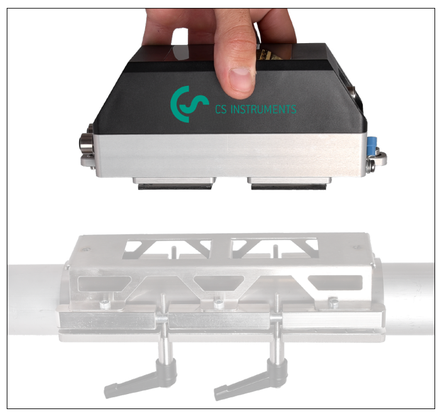	VC 600 – Universal measuring unit, suitable for all quick-clamping systems from Ø 25 mm to Ø 90 mm	0695 0601 + Order code B_…I_

Order code
0695 0601_B1_C1_D1_E1_F1_G1_H1_I1

Wall thickness	
B1	1.5...2.2 mm
B2	2.2...5.0 mm

Material type	
C1	Steel, stainless steel, aluminium

Adjustment/calibration	
D1	No real gas calibration – gas setting via gas constant
D2	True gas calibration for the selected gas type

Gas type	
E1	Compressed air
E2	Nitrogen (N2)
E90	Other gases available on request

Measuring range	
F1	0...20 m/s
F2	0...25 m/s

Accuracy class	
G1	± 1.5% of the measured value ±0.3% of full scale (standard)

Reference standard	
H1	20°C, 1000 mbar
H2	0°C, 1013.25 mbar
H3	15°C, 981 mbar
H4	15°C, 1013.25 mbar

Signal output/bus connection option	
I1	1x 4…20 mA, RS485 (Modbus-RTU)
I2	1x 4…20 mA, IO-Link
I3	Ethernet interface PoE (Modbus/TCP), 1x 4…20 mA, RS485
I4	M-Bus, 1 x 4…20mA, RS485, (Modbus-RTU)

DESCRIPTION		ORDER NO.
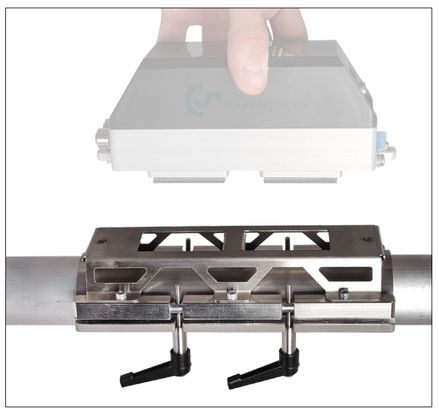	Quick-release clamping system for the VC 600 universal measuring unit	0695 0602 + Order code A_

Order code for quick-release system
0695 0602_A20

Pipe size (outer diameter)	
A20	Ø 25...30 mm
A30	Ø 32...36 mm
A40	Ø 38...43 mm
A50	Ø 45...50 mm
A60	Ø 50...55 mm
A70	Ø 57...62 mm
A80	Ø 63...70 mm
A90	Ø 72...78 mm
A95	Ø 78...84 mm
A100	Ø 84...90 mm

Accessories for the VC 600 clamp-on flow sensor

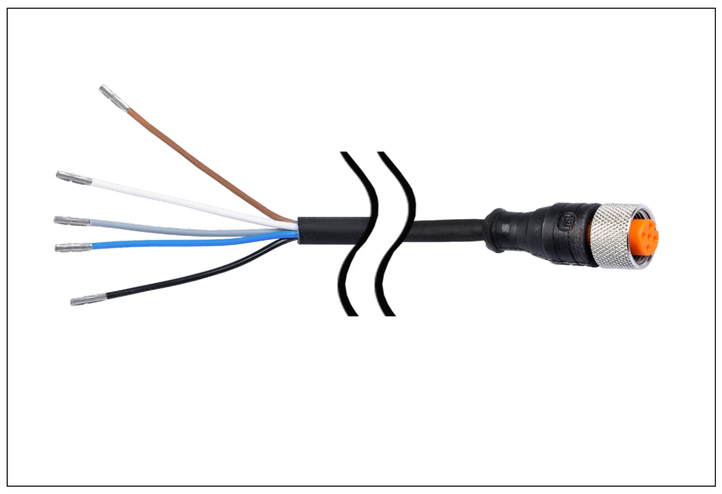

DESCRIPTION	ORDER NO.
Connection cable for sensors with M12 plug, 16 ft	0553 0104
Connection cable for sensors with M12 plug, 32 ft	0553 0105
Connection cable for sensors with M12 plug, 64 m	0553 0120
Connection cable for sensors with M12 plug, 16 ft, shielded	0553 0129
Connection cable for sensors with M12 plug , 32 ft, shielded	0553 0130

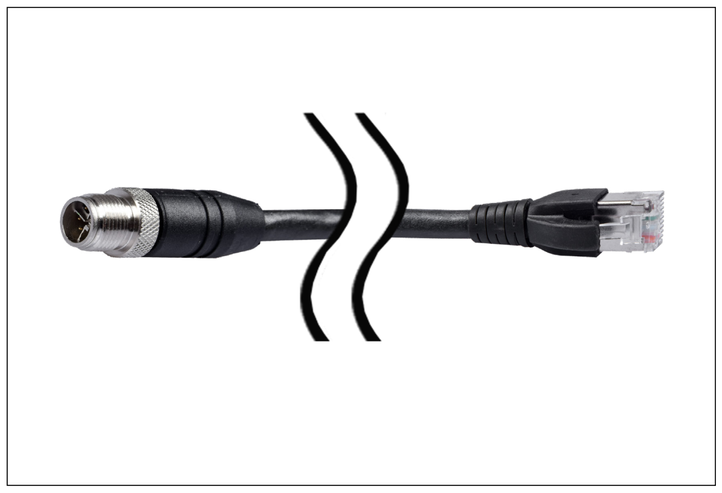

DESCRIPTION	ORDER NO.
Ethernet connection cable, length 16 ft, M12 connector, X-coded (8-pin) to RJ 45 connector	0553 2503
Ethernet connection cable, length 32 ft, M12 plug, X-coded (8-pin) to RJ 45 plug	0553 2504
Ethernet connection cable, length 64 ft, M12 plug, X-coded (8-pin) to RJ 45 plug	0553 2505

DESCRIPTION	ORDER NO.
M12 T-plug for VA 500/520 for connecting multiple sensors to an M-Bus or Modbus network	0 2000 0823

DESCRIPTION	ORDER NO.
Mains power supply unit 100–240 VAC / 24 VDC for sensors with M12 plug	0554 0109

BESCHREIBUNG	ORDER NO.
Wall thickness measuring device CS 0495 incl. case and calibration block	0560 0495

Accessories for the VC 600 clamp-on flow sensor

DESCRIPTION	ORDER NO.
PTS 500 sensor for measuring pressure and temperature	0694 7000

Example order code PTS 500:

0694 7000_A1_B1_C1

Signal output option	
A1	1 x 4…20 mA analog output (not electrically isolated), alarm relay, RS 485 (Modbus-RTU)

Pressure measurement ranges	
B3	0... 10 bar (0...145 psi)
B4	0... 16 bar (0...232 psi)
B5	0... 50 bar (0...725 psi)

Process connections	
C1	G1/2“
C2	1/2“ NPT

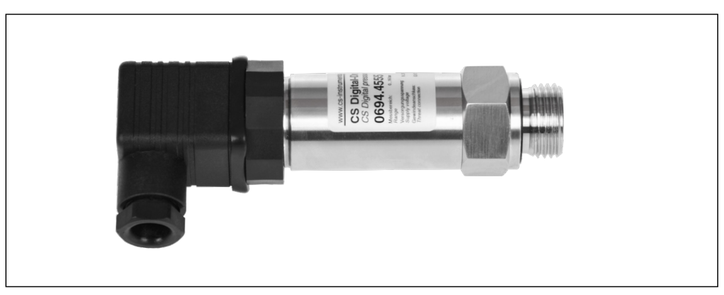

DIGITAL PRESSURE SENSORS	± 1% ACCURACY	± 0,5% ACCURACY
DPS 16 digital pressure sensor, 0…16 bar, RS 485, G1/2″	0694 2886	0694 4555
DPS 16 digital pressure sensor, 0…16 bar, RS 485, 1/2″ NPT	0694 3886	0694 5555

PRESSURE PROBES WITH 4–20 mA ANALOG OUTPUT	± 1% ACCURACY	± 0,5% ACCURACY
Standard Pressure probe CS 16, 0...232 psi 1/4" NPT	0694 6001	0694 6002
Standard Pressure probe CS 40, 0...580 psi 1/4" NPT	0694 6003	0694 6004
Standard Pressure probe CS 100, 0...1450 psi 1/4" NPT		0694 6005
Standard pressure sensor CS 100, 0...100 bar		0694 6006

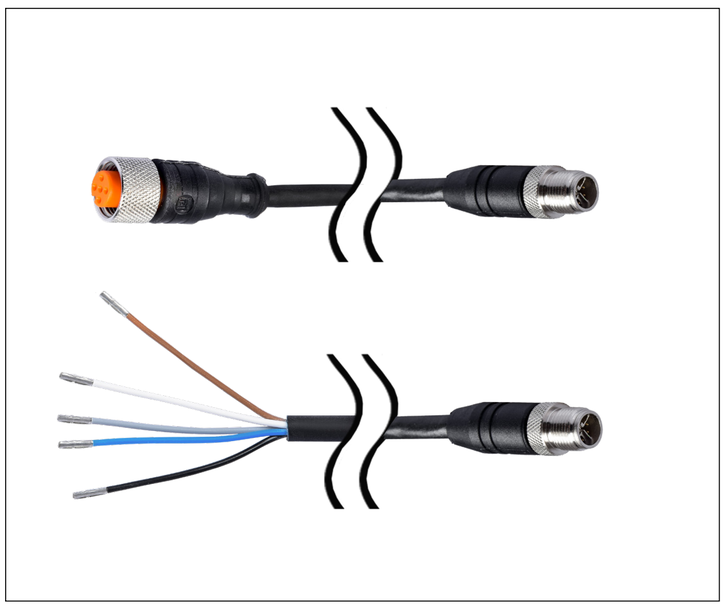

DESCRIPTION	ORDER NO.
Connection cable for pressure and temperature sensors for the VC 600 Clamp-on	0553 0146

Example order code:

0553 0146_A1_B1_

Length	
A1	16 ft
A2	32 ft
A3	48 ft
A4	variable length (on request)

Connection	
B3	with M12 plug
B4	with open ends

DESCRIPTION	ORDER NO.
Surface temperature sensor, PT 100 Class A (4-wire), 3 ft cable, with M12 socket compatible with VC 600	0604 0210

VC 600 Dimensions:

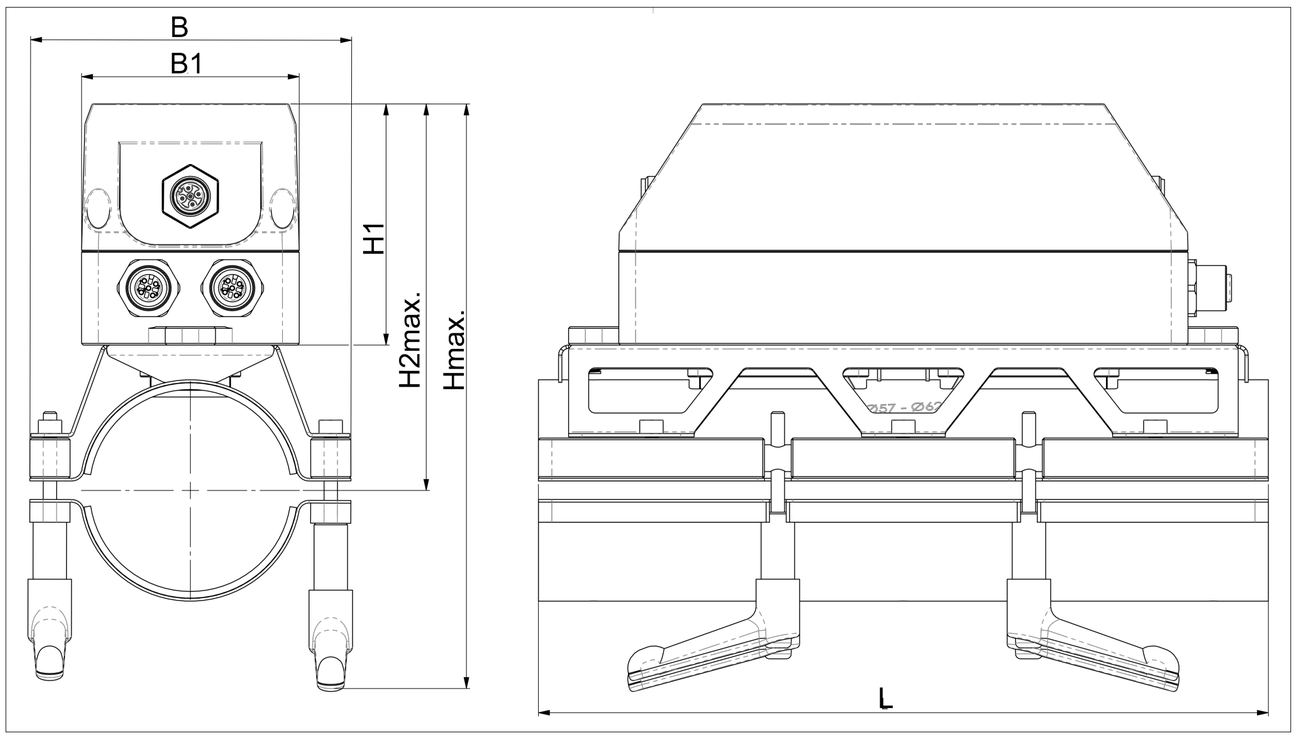

Order Code	Outer pipe diameter from – to (mm)	L (mm)	B (mm)	B1 (mm)	H1 (mm)	H2 max. (mm)	H max. (mm)
A20	Ø 25...30 mm	218	62	65	72	101	162.5
A30	Ø 32...36 mm	218	70	65	72	104	165.5
A40	Ø 38...43 mm	218	77.5	65	72	107.5	168.2
A50	Ø 45...50 mm	218	83.5	65	72	111	172.5
A60	Ø 50...55 mm	218	90.2	65	72	113.5	174
A70	Ø 57...62 mm	218	96	65	72	117	177.5
A80	Ø 63...70 mm	218	102.5	65	72	121	182.5
A90	Ø 72...78 mm	218	111.5	65	72	125	186.5
A95	Ø 78...84 mm	218	116	65	72	129	190.5
A100	Ø 84...90 mm	218	124.5	65	72	131	192

VC 600 Damping Clamp Dimensions

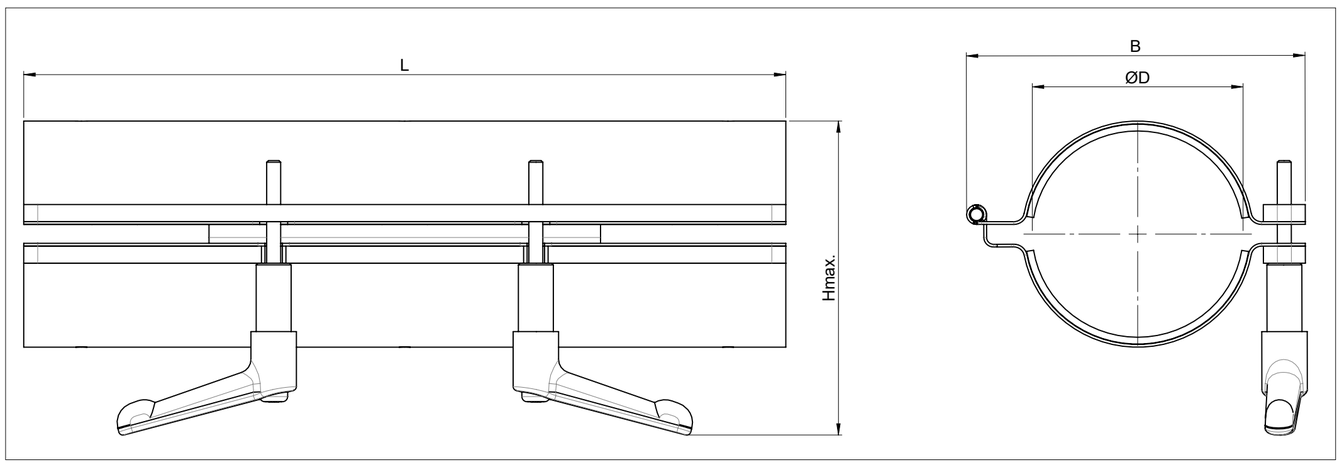

Order Code	Outer pipe diameter from – to (mm)	L (mm)	B (mm)	H max. (mm)
A20	Ø 25...30 mm	218	63	75
A30	Ø 32...36 mm	218	70	78.5
A40	Ø 38...43 mm	218	79.5	83.5
A50	Ø 45...50 mm	218	85	86.5
A60	Ø 50...55 mm	218	92	90.5
A70	Ø 57...62 mm	218	97	92
A80	Ø 63...70 mm	218	103.5	94.5
A90	Ø 72...78 mm	218	112.5	100.5
A95	Ø 78...84 mm	218	117	102.5
A100	Ø 84...90 mm	218	126	106

Notes

CS INSTRUMENTS WELTWEIT

Head office in Germany

GERMANY

CS INSTRUMENTS GmbH & Co. KG
Zindelsteiner Straße 15
78052 VS-Tannheim
Germany
P.: +49 (0)7705 978 99-0
F: +49 (0)7705 978 99-20
E-Mail: info@cs-instruments.com
Web.: www.cs-instruments.com/de

CS INSTRUMENTS GmbH & Co. KG
Gewerbehof 14
24955 Harrislee
Germany
P.: +49 (0)461 807 150-0
F: +49 (0)461 807 150-15
E-Mail: info@cs-instruments.com
Web.: www.cs-instruments.com/de

Tochterfirmen von CS INSTRUMENTS

AUSTRIA
CS INSTRUMENTS GmbH
Grazer Straße 8
8605 Kapfenberg
Austria
P.: +43 (0) 3862 54 0 67
E-Mail: a.sieberer@cs-instruments.at
Web.: www.cs-instruments.com/at

NETHERLANDS / BELGIUM
CS INSTRUMENTS BENELUX B.V.
Bakboordlaan 30
3448 KG Woerden
Netherlands
P.NL: +31 642 87 79 76
P.BE: +32 484 57 59 50
E-Mail: info@cs-instruments.nl
Web.: www.cs-instruments.com/nl

SWITZERLAND
CS INSTRUMENTS (Schweiz) GmbH
Mühlegasse 8
3237 Brüttelen
Switzerland
P.: +41 32 355 4160
E-Mail: info@cs-instruments.ch
Web.: www.cs-instruments.com/ch

CHINA
CS INSTRUMENTS (Shanghai) Co.Ltd
Room 508,JT1166, No. 1080, Moyu South Road
Anting Town, Jiading District
200003, Shanghai, China
P.: +86 13601694498
E-Mail: k.wu@cs-instruments.cn
Web.: www.cs-instruments.com/zh

SOUTH AFRICA
CS INSTRUMENTS (Pty) Ltd.
142 Briza Road, Table View
7441 Cape Town
South Africa
P.: +27 (0)21 557 56 18
E-Mail: info@cs-instruments.co.za
Web.: www.cs-instruments.com/za

TURKEY
CS INSTRUMENTS Ölçüm Ekipmanları Tic. Ltd. Şti.
Yeşilbağlar Mah. D-100 Bulv.
Pendik Pera Residence A Blok No: 20K
34893 Pendik İstanbul,Turkey
P.: +90 216 755 10 20
E-Mail: info@cs-instruments.com.tr
Web.: www.cs-instruments.com/tr

FRANCE
CS INSTRUMENTS
72, boulevard Berthier
75017 Paris
France
P.: +33 1 86 95 87 60
E-Mail: info@cs-instruments.fr
Web.: www.cs-instruments.com/fr

SPAIN
CS INSTRUMENTS S.L.
Avenida Cerro Milano 4, Local 1
28051 Madrid
Spain
P.: +34 91 33 15 758
E-Mail: info@csinstruments.es
Web.: www.cs-instruments.com/es

USA
CS INSTRUMENTS USA INC.
8237 Pinellas Dr.
Bluffton, SC 29910
USA
P.: +1 (843) 599 6700
E-Mail: info-us@cs-instruments.com
Web.: www.cs-instruments.com/us

ITALY
CS INSTRUMENTS Italia S.r.l.
Via Matteotti 66
20092 - Cinisello Balsamo (Mi)
Italien
P.: +39 0225061761
E-Mail: info@cs-instruments.it
Web.: www.cs-instruments.com/it

SWEDEN / NORWAY
CS INSTRUMENTS AB
Hovlanda 30
471 93 Kållekärr
Sweden
P.: +46 304 66 84 50
E-Mail: a.ahs@cs-instruments.com
Web.: www.cs-instruments.com/se

INDONESIA
PT.CSInstruments Indonesia Abadi
Jalan raya bojong nangka,
Ruko Podomoro city block B2 No 26
Jawa Barat 16963
Indonesia
P.: +62 812-1888-5324
E-Mail: g.rufiyanto@csinstruments.com
Web.: www.cs-instruments.com

INDIA
CS INSTRUMENTS INDIA PRIVATE LIMITED
27 – 28, Heera Panna Market, Pur Road
BHILWARA - 311001 (Rajasthan)
India
P.: +91 98294 19901
E-Mail: s.jevlia@cs-instruments.com
Web.: www.cs-instruments.com

POLSKA
CS INSTRUMENTS Polska Sp. z o.o.
Zgierska 142/201
91-320 Lodz
Polen
P.: +48 662 605 486
E-Mail: a.florczak@cs-instruments.com
Web.: www.cs-instruments.com/pl